NOTES:

1. UNIT SHOULD BE SUPPORTED BY MULTIPLE M3 MOUNTING HOLES.
2. OVERALL THERMAL DISSIPATION REQUIREMENT IS APPROX. 7.5 WATTS. PRIMARY HEAT SINKING SURFACES INDICATED.
3. FOR CONNECTOR INFORMATION, REFERENCE ELECTRICAL ICD DOCUMENT NO. S-D03-10577.
4. APPROXIMATE MASS = 549g.
5. RECOMMENDED WINDOW TILT: VERTICAL 8.8°

REVISIONS					
ZONE	REV.	DESCRIPTION	ECO	DATE	ENGINEER
	D	ADMINISTRATIVE - 3D CAD FORMAT UPDATE. NO CHANGE TO GEOMETRY OR INTERFACE REQUIREMENTS	1713	2024-02-28	C. JOHNSON
	E	UPDATED C.G. AND FOV	1815	2025-12-12	C. JOHNSON

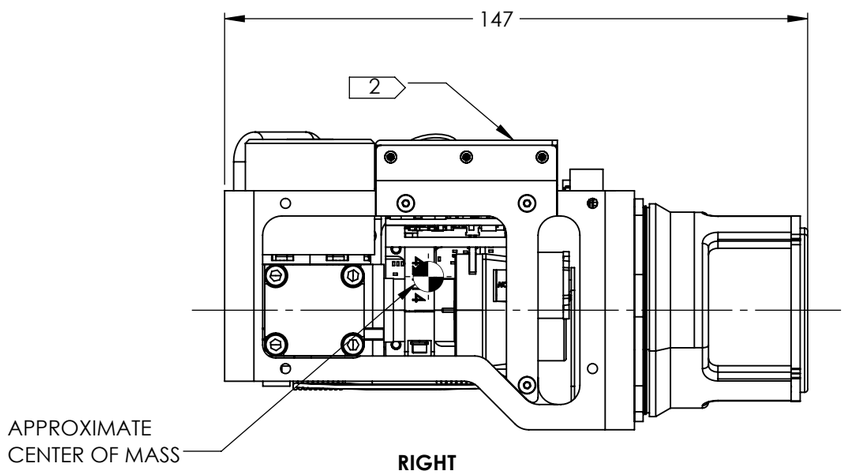

RIGHT

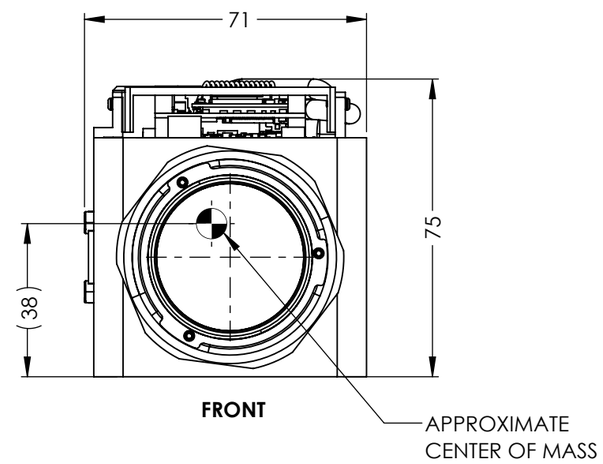

FRONT

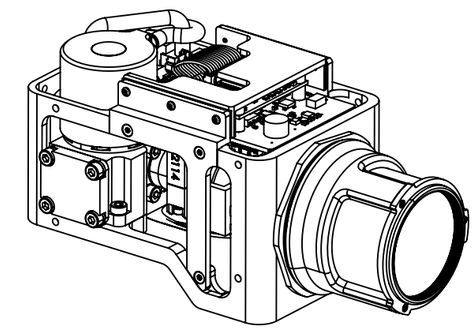

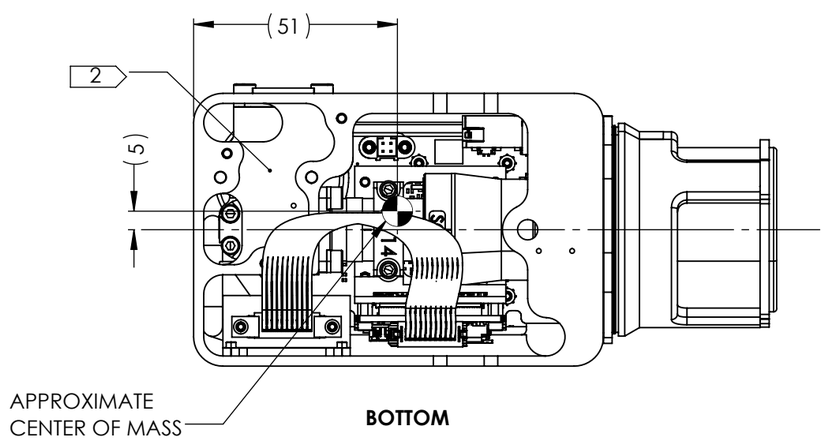

BOTTOM

Product Export Classification Control Number(ECCN): 6A003.b.4.a

This document does not contain export-controlled technology.

UNLESS OTHERWISE SPECIFIED
DIM ARE IN MILLIMETERS

X ± 2.5 mm	ANGLES
X.X ± 0.3 mm	X ± 1°
X.XX ± 0.13 mm	X.X ± 0.5°

THIRD ANGLE PROJECTION

DO NOT SCALE DRAWING

PROPRIETARY AND CONFIDENTIAL
THE INFORMATION CONTAINED IN THIS DRAWING IS THE SOLE PROPERTY OF SIERRA OLYMPIA TECHNOLOGIES, INC. ANY REPRODUCTION IN PART OR AS A WHOLE WITHOUT THE WRITTEN PERMISSION OF SIERRA OLYMPIA TECHNOLOGIES, INC. IS PROHIBITED.

MATERIAL: N/A

FINISH: N/A

CAD CONTROLLED PART. THE NOMINAL PART GEOMETRY IS CONTROLLED BY THE 3D CAD PART FILE.

SIERRA-OLYMPIA TECHNOLOGIES INC.

DESCRIPTION: MECHANICAL ICD VENTUS-OGI 25MM

SIZE: B | DRAWN BY: C. JOHNSON | SHEET 1 OF 3

DRAWING NUMBER: S-D11568 | Rev. E

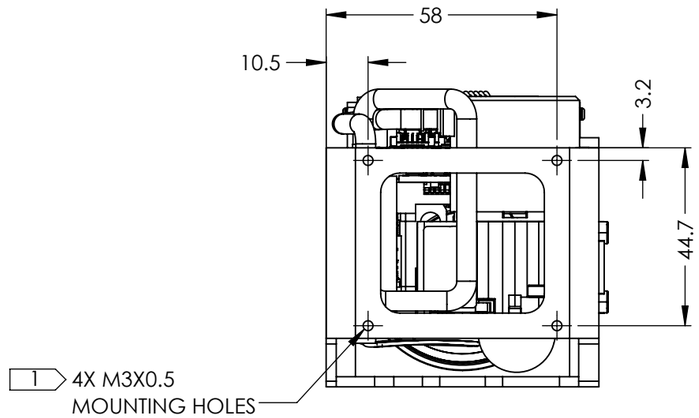

BACK

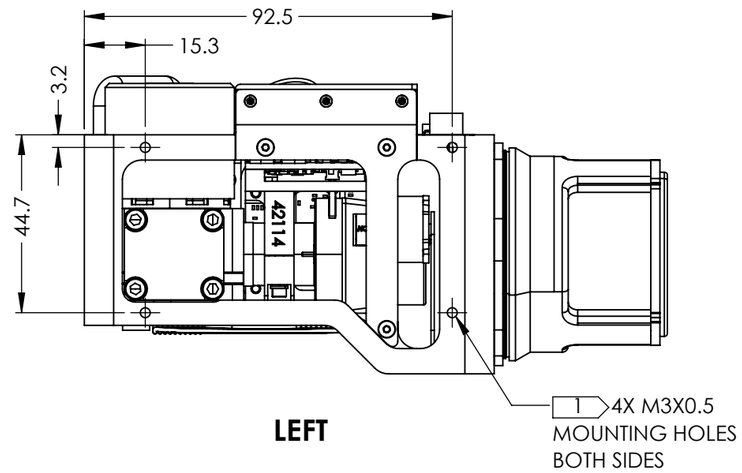

LEFT

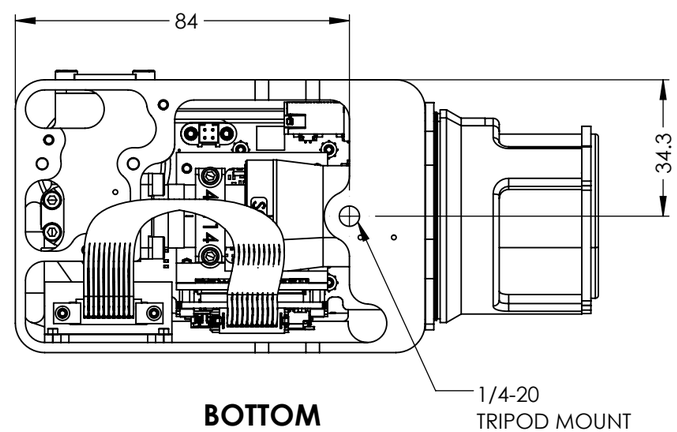

BOTTOM

Product Export Classification Control Number(ECCN): 6A003.b.4.a This document does not contain export-controlled technology.	UNLESS OTHERWISE SPECIFIED DIM ARE IN MILLIMETERS X ± 2.5 mm / ANGLES X ± 1° X.X ± 0.3 mm / X.X ± 0.5° X.XX ± 0.13 mm THIRD ANGLE PROJECTION DO NOT SCALE DRAWING	**PROPRIETARY AND CONFIDENTIAL** THE INFORMATION CONTAINED IN THIS DRAWING IS THE SOLE PROPERTY OF SIERRA OLYMPIA TECHNOLOGIES, INC. ANY REPRODUCTION IN PART OR AS A WHOLE WITHOUT THE WRITTEN PERMISSION OF SIERRA OLYMPIA TECHNOLOGIES, INC. IS PROHIBITED. MATERIAL: N/A FINISH: N/A CAD CONTROLLED PART. THE NOMINAL PART GEOMETRY IS CONTROLLED BY THE 3D CAD PART FILE.	SIERRA-OLYMPIA TECHNOLOGIES INC. DESCRIPTION: MECHANICAL ICD VENTUS-OGI 25MM SIZE B / DRAWN BY: C. JOHNSON / SHEET 2 OF 3 DRAWING NUMBER: S-D11568 / Rev. E

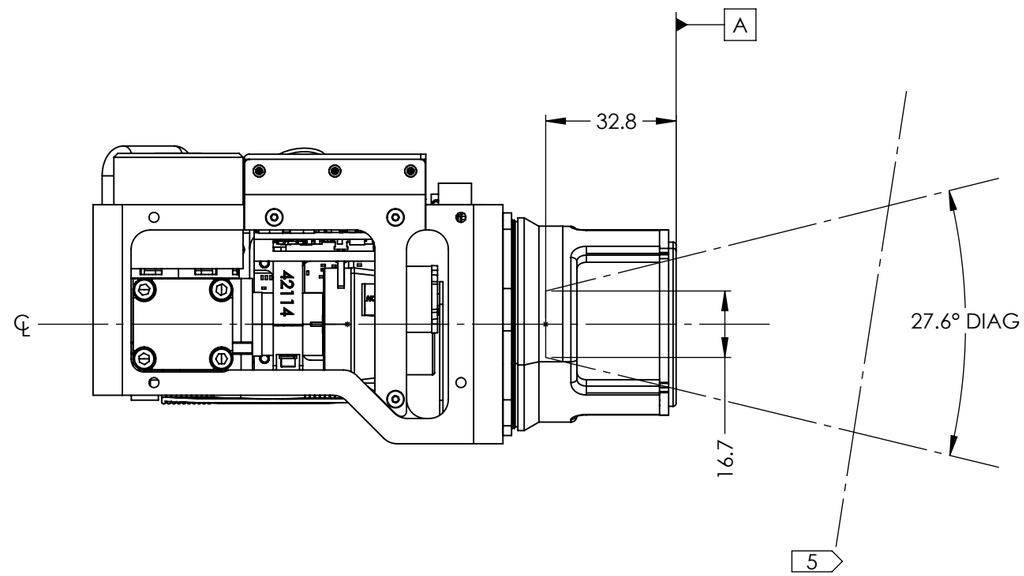

ENTRANCE PUPIL LOCATION = 32.8mm BEHIND DATUM A
ENTRANCE PUPIL DIAMETER = 16.7mm

HFOV	22.3
VFOV	17.7
DFOV	27.6

Product Export Classification Control Number(ECCN): 6A003.b.4.a

This document does not contain export-controlled technology.

UNLESS OTHERWISE SPECIFIED
DIM ARE IN MILLIMETERS

X ± 2.5 mm	ANGLES
X.X ± 0.3 mm	X ± 1°
X.XX ± 0.13 mm	X.X ± 0.5°

THIRD ANGLE PROJECTION

DO NOT SCALE DRAWING

PROPRIETARY AND CONFIDENTIAL
THE INFORMATION CONTAINED IN THIS DRAWING IS THE SOLE PROPERTY OF SIERRA OLYMPIA TECHNOLOGIES, INC. ANY REPRODUCTION IN PART OR AS A WHOLE WITHOUT THE WRITTEN PERMISSION OF SIERRA OLYMPIA TECHNOLOGIES, INC. IS PROHIBITED.

MATERIAL: N/A

FINISH: N/A

CAD CONTROLLED PART. THE NOMINAL PART GEOMETRY IS CONTROLLED BY THE 3D CAD PART FILE.

SIERRA-OLYMPIA TECHNOLOGIES INC.

DESCRIPTION: MECHANICAL ICD VENTUS-OGI 25MM

SIZE: B
DRAWN BY: C. JOHNSON
SHEET 3 OF 3
DRAWING NUMBER: S-D11568
Rev. E